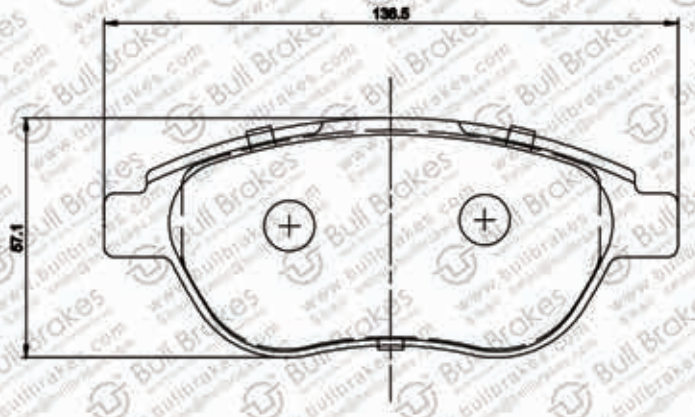

X4

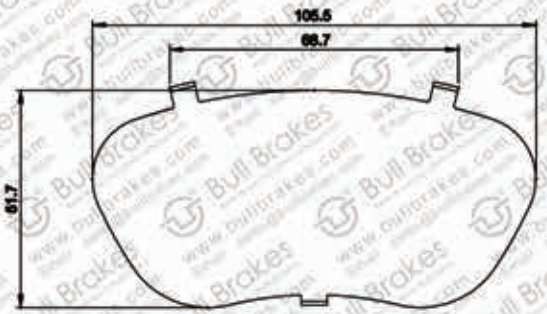

展开尺寸：10.98x0.71=74cm²

详图A 3/1

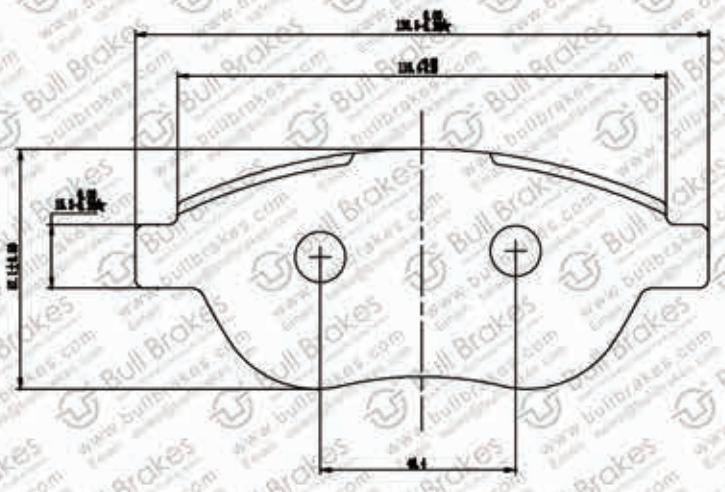

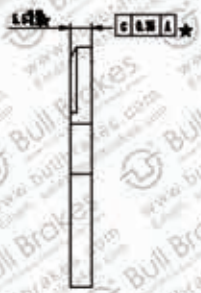

Size	Tolerances
0-30mm	±0.25
30-100mm	±0.35
>100mm	±0.50
Rounded corner	
0-3	±0.25
3-10	±0.50
>10	±1
Angle	±1

BULL INDUSTRY CO.,LIMITED

www.bullbrakes.com
Email: sales@bullbrakes.com

GDB1464

Steel Plate 5.5 -GB/T 709 / Q235-GB/T 700