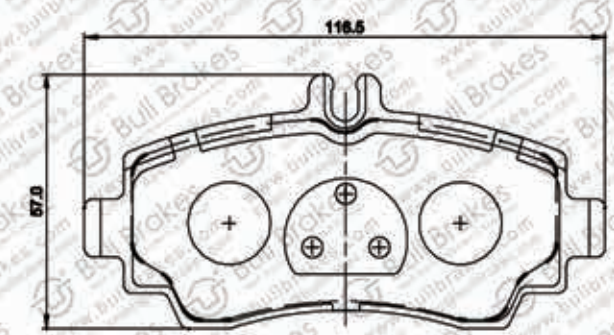

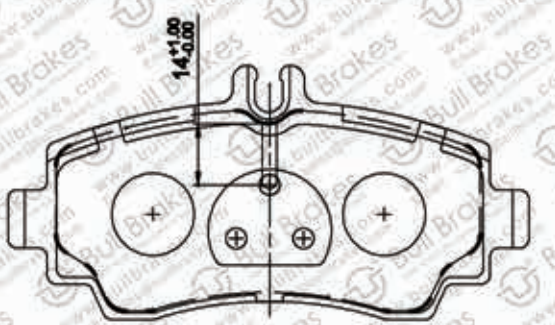

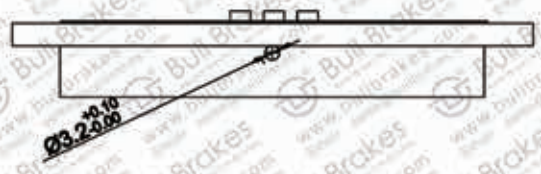

X2

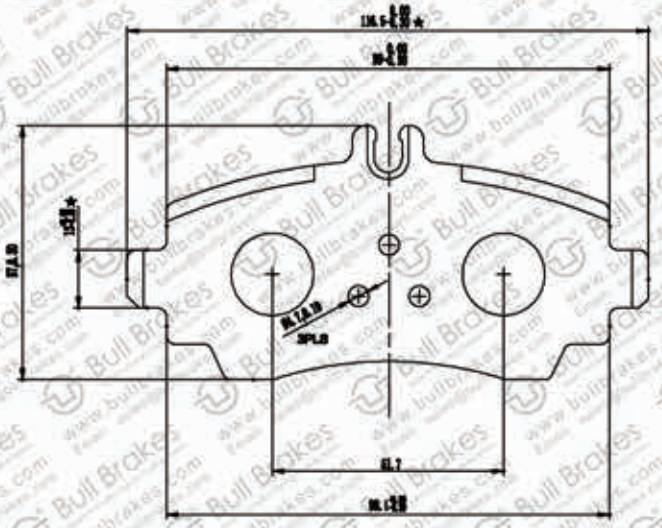

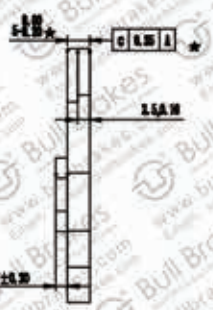

X2

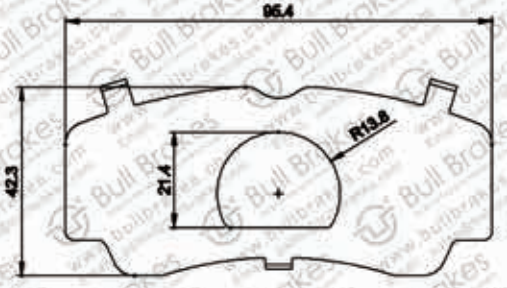

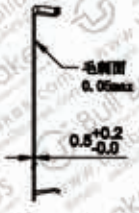

Size	Tolerances
0-30mm	± 0. 25
30-100mm	± 0. 35
>100mm	± 0. 50
Rounded corner	
0-3	± 0. 25
3-10	± 0. 50
>10	± 1
Angle	± 1

BULL INDUSTRY CO.,LIMITED

www.bullbrakes.com
Email: sales@bullbrakes.com

D1250

Steel Plate 5.5 -GB/T 709
Q235-GB/T 700